Product Information Packet

Model AHP-1800XPHC-1

Solid State, NEMA 4X, Class I Div 2,

Air Conditioner for Remote Temperature Control

Part #0-0170-3-006

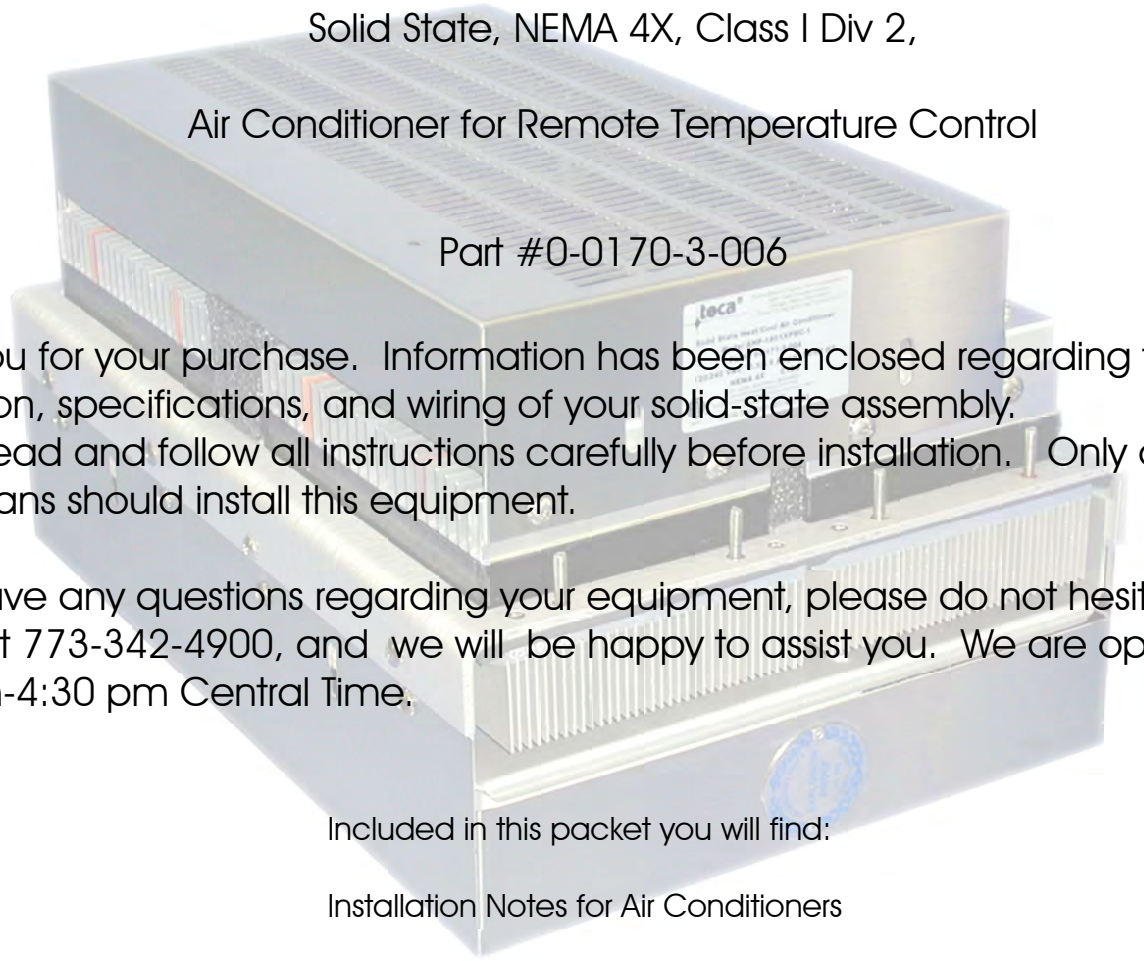

Thank you for your purchase. Information has been enclosed regarding the installation, specifications, and wiring of your solid-state assembly.
Please read and follow all instructions carefully before installation. Only qualified technicians should install this equipment.

If you have any questions regarding your equipment, please do not hesitate to call us at 773-342-4900, and we will be happy to assist you. We are open from 8:00 am-4:30 pm Central Time.

Included in this packet you will find:

Installation Notes for Air Conditioners

Product Literature and Specifications

Assembly Drawing # 1800-B-A18

Wiring Drawing # 1800-A-E110

Installation Drawing # 1800-A-F52

Warranty Information

teca

ThermoElectric Cooling America Corporation
4048 W. Schubert Avenue • Chicago, IL (U.S.A.) 60639
Ph: 773/342-4900 Fx: 773/342-0191
sales@thermoelectric.com www.thermoelectric.com

Important Installation Notes for Air Conditioners

Mounting Styles: Both 'thru mount' and 'flush mount' units can be positioned in any orientation and on any enclosure surface. It is important to consider interior air flow patterns when determining the mounting location. Also of importance is an unrestricted flow of ambient air thru the hot side heat exchanger. Ease of access and inspection must be considered for those applications in particularly severe environments which may require occasional maintenance.

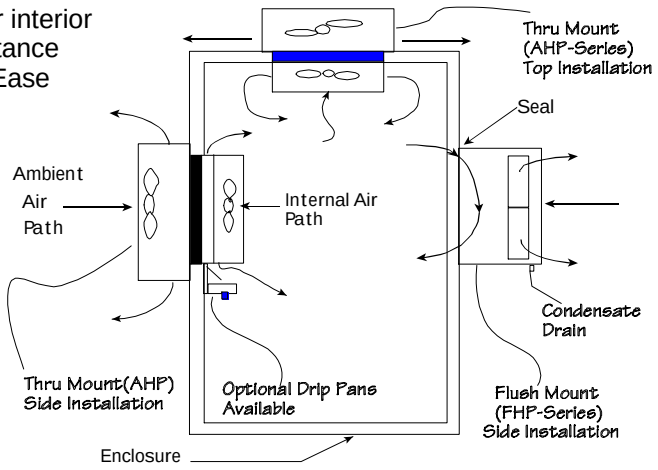

Vertical (Side/Front/Back) Mounting:

Vertical mounting refers to the vertical direction of the cold side or interior fins and is recommended for applications with high humidity, poor and incomplete cabinet seals or any condition which may cause the cold side fins to be maintained at temperatures below the dew point for long periods of time allowing for the formation of condensation. The vertical fin direction provides a drip path whereupon condensation can be collected via a moisture removal system (standard on FHP-units) or a drip pan positioned below the cold side fins. Drip pans are optional for thru mount units.

Condensate Removal System:

All FHP-Series and AHP-1400 air conditioners contain a built-in condensate removal system. The condensate kit consists of a antifungal sponge with a condensate wick. PVC tubing is also provided for drainage. Drip pans are optional for thru mount units which must be evaluated on an individual basis. Equations defining a relationship between the cold side fin and enclosure temperatures are provided to assist in the evaluation.

Top Mounting:

Though often the easiest location to mount it is often the most difficult to protect from condensation in this orientation due to the fin orientation, gravity and any susceptible components below. If a drip pan is employed by the end user use caution to place the pan far enough away from the internal fan to minimize the restriction of air flow. The pan should cover the fin ends as well as the fan area. When there is a choice, the vertical orientation is preferred by most users.

Maintenance:

Since the technology is solid-state, there are no filters, compressors, or fluorocarbons to maintain. The only moving parts are the fans. It is recommended for harsh or dirty environments that the heat sinks be cleaned from time to time. This can be accomplished by directing compressed air over the external fins or on NEMA 4 versions by hosing the unit down. This will increase the overall life and performance of the system.

Cautions:

Take care when mounting not to damage the seal between the hot and cold side sinks. Do not attempt to mount a unit to a warped surface or try to make the units mounting surface conform to an unflat surface. Do not pinch or damage any leads when mounting. Do not over tighten any installation screw, use reasonable force. Always mount with any condensate drain down. Do not compress the cold side between the hot side and any other surface. Do not obstruct the airflow on either side. When mounting consider the natural air flows of the enclosure. Connect power only after the installation is complete.

Notes on condensation:

Condensation occurs at the cold side fins when the surface temperature goes below the dew point. To reduce or remove condensate, consider the following:

- Regulate the Fin Temperature above the Dewpoint.
- Keep Enclosure Closed and Sealed from Outside Humidity.
- Use Desiccant (Moisture absorbing Granules.)
- Employ Condensate Removal System/Drip Pans.

If you have any questions regarding your installation, Please feel free to contact our technical department for assistance at 773-342-4900.

AHP-1800EP | Air Conditioner

Air Cooled
Thru Mount
NEMA-12, 4X, Class I Div 2

120 VAC, 240 VAC Input
Hazardous Locations

FEATURES

- Compact, (18" L X 12.35" W X 9.69"D)
- Excels in high ambient temperatures
- Environmentally Safe
- Dual voltage versions available, consult factory.
- No compressor, fluorocarbons or filters
- Virtually maintenance-free operation
- Stainless steel exterior housing
- Versions to withstand corrosive environments, shock and vibration
- Mounts and operates in any orientation
- Groups A, B, C, D



INCLUDES

- Adjustable temperature control
- Mounting gasket and hardware
- Power input line cord

OPTIONS

- Other temperature settings for single set point controls

SPECIFICATIONS

	MODEL	PART NUMBER	PERFORMANCE RATING BTU/HR	VOLTAGE VAC 50/60 HZ	CURRENT AMPS.	WEIGHT LBS.(KG)	TEMP. CONTROL	OPERATING AMBIENT TEMPERATURE RANGE °C	OPERATING ENCLOSURE TEMPERATURE RANGE °C	AGENCY APPROVALS
NEMA 12 CID 2	AHP-1800EP	0-0180-0-002	1035-1180	120	8.0	46(21)	TC-6F	-40/+63	-10/+60	UL1604/UL1995/CSA22.2
	AHP-1800EP	0-01F0-0-002	1035-1180	120	8.0	46(21)	85°F (30°C)	-40/+63	-10/+60	UL1604/UL1995/CSA22.2
	AHP-1800EP-1	0-0170-0-004	1035-1180	120	8.0	46(21)	EXT*	-40/+63	-10/+60	UL1604/UL1995/CSA22.2
	AHP-1800EPHC	0-0130-1-003	1035-1180	120	8.0	46(21)	TC-3F	-40/+63	-10/+60	UL1604/UL1995/CSA22.2
	AHP-1800EPHC-1	0-0170-1-006	1035-1180	120	8.0	46(21)	EXT*	-40/+63	-10/+60	UL1604/UL1995/CSA22.2
	AHP-1801EP	0-0181-0-002	1035-1180	120/240	8.0/5.0	46(21)	TC-6F	-40/+63	-10/+60	UL1604/UL1995/CSA22.2
	AHP-1801EP	0-01F1-0-002	1035-1180	120/240	8.0/5.0	46(21)	85°F (30°C)	-40/+63	-10/+60	UL1604/UL1995/CSA22.2
	AHP-1801EP-1	0-0171-0-002	1035-1180	120/240	8.0/5.0	46(21)	EXT*	-40/+63	-10/+60	UL1604/UL1995/CSA22.2
	AHP-1801EPHC	0-0131-1-003	1035-1180	120/240	8.0/5.0	46(21)	TC-3F	-40/+63	-10/+60	UL1604/UL1995/CSA22.2
	AHP-1801EPHC-1	0-0131-1-006	1035-1180	120/240	8.0/5.0	46(21)	EXT*	-40/+63	-10/+60	UL1604/UL1995/CSA22.2
NEMA 4X CID 2	AHP-1800XP	0-0180-2-002	1035-1180	120	8.0	47(21.4)	TC-6F	-40/+75	-10/+60	UL1604/UL1995/CSA22.2
	AHP-1800XP	0-01F0-2-002	1035-1180	120	8.0	47(21.4)	85°F (30°C)	-40/+75	-10/+60	UL1604/UL1995/CSA22.2
	AHP-1800XP-1	0-0170-2-004	1035-1180	120	8.0	47(21.4)	EXT*	-40/+75	-10/+60	UL1604/UL1995/CSA22.2
	AHP-1800XPHC	0-0130-3-003	1035-1180	120	8.0	47(21.4)	TC-3F	-40/+75	-10/+60	UL1604/UL1995/CSA22.2
	AHP-1800XPHC-1	0-0170-3-006	1035-1180	120	8.0	47(21.4)	EXT*	-40/+75	-10/+60	UL1604/UL1995/CSA22.2
	AHP-1801XP	0-0181-2-002	1035-1180	120/240	8.0/5.0	47(21.4)	TC-6F	-40/+75	-10/+60	UL1604/UL1995/CSA22.2
	AHP-1801XP	0-01F1-2-002	1035-1180	120/240	8.0/5.0	47(21.4)	85°F (30°C)	-40/+75	-10/+60	UL1604/UL1995/CSA22.2
	AHP-1801XP-1	0-0171-2-005	1035-1180	120/240	8.0/5.0	47(21.4)	EXT*	-40/+75	-10/+60	UL1604/UL1995/CSA22.2
	AHP-1801XPHC	0-0131-3-003	1035-1180	120/240	8.0/5.0	47(21.4)	TC-3F	-40/+75	-10/+60	UL1604/UL1995/CSA22.2
	AHP-1801XPHC-1	0-0171-3-004	1035-1180	120/240	8.0/5.0	47(21.4)	EXT*	-40/+75	-10/+60	UL1604/UL1995/CSA22.2

* Unit is set for 5-32 VDC external signal, relay(s) included

Consult factory for shock and vibration models

AHP-1800EP

PERFORMANCE CURVE

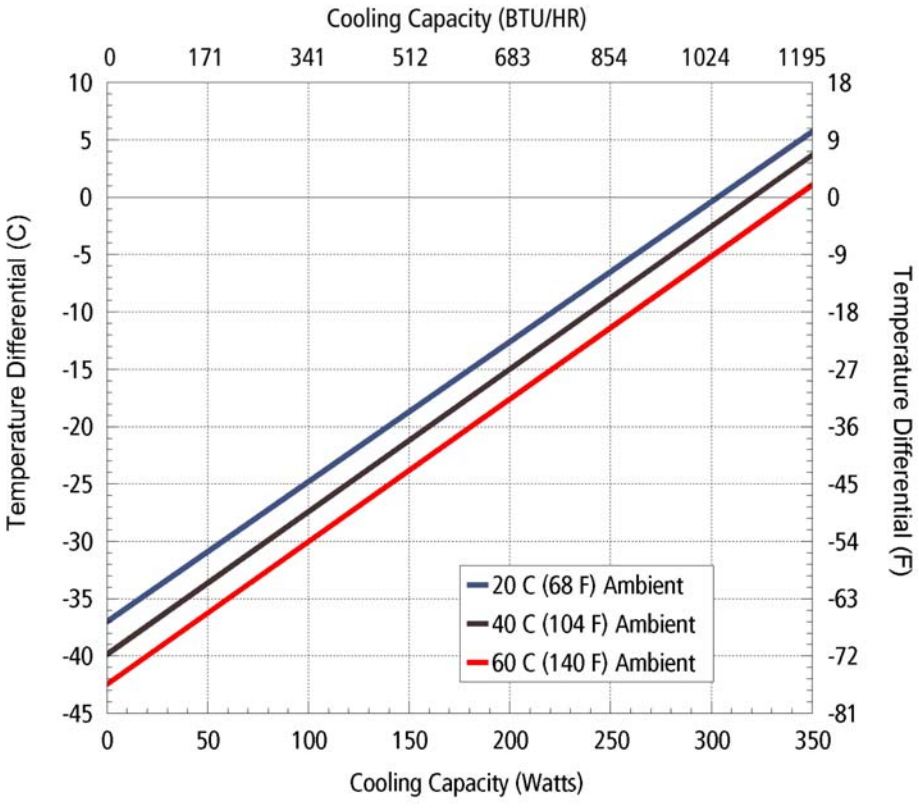

Equation of line: y=ΔT(°C) x=Capacity (Watts)			
Ambient Temp	**20°C**	**40°C**	**60°C**
Enclosure Air	y=.122x-37.0	y=.122x-39.7	y=.122x-42.3
Cold Sink	y=.09x-37.0	y=.09x-39.7	y=.09x-42.3

MOUNTING STYLE

Thru Mount

ENVIRONMENTS SERVED

Class I Div 2 NEMA-12 IP 52

Class I Div 2 NEMA-4X IP 56

RATING (TRADITIONAL)

1100 BTU/hr @ 0 °F ΔT

1420 BTU/hr @ +20 °F ΔT *

RATING (DIN 3168)

322 Watts L35 L35

210 Watts L35 L50

* See page 10

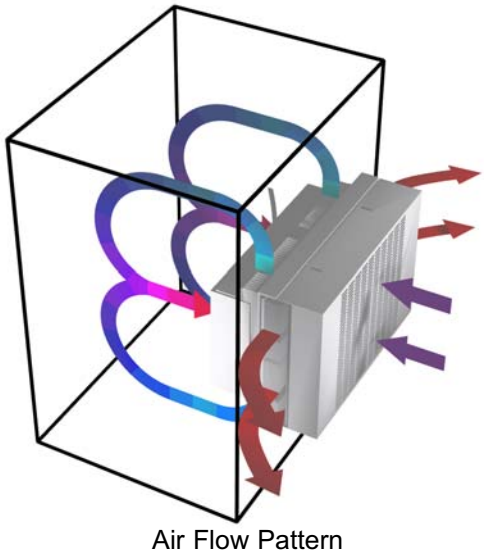

Air Flow Pattern

DIMENSIONS

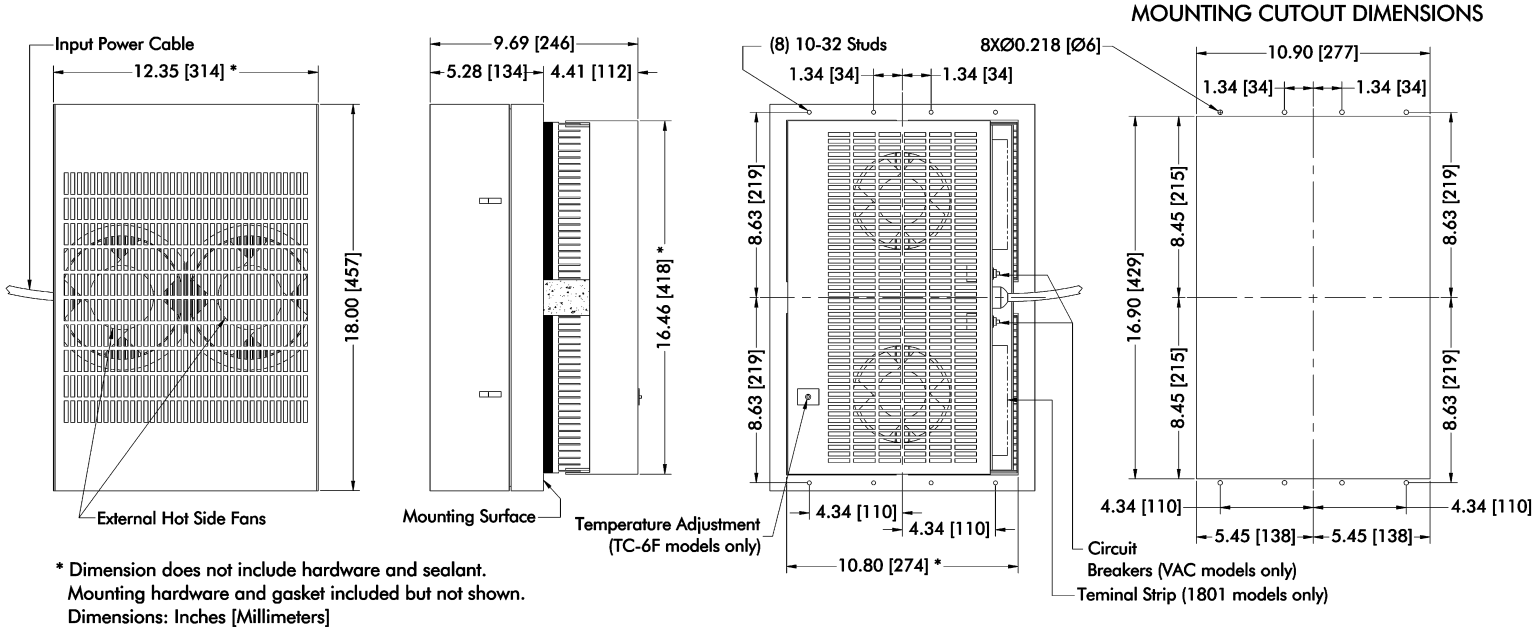

* Dimension does not include hardware and sealant.
Mounting hardware and gasket included but not shown.
Dimensions: Inches [Millimeters]

LTR	DESCRIPTION	DATE	APPROVED
A	ADD. METRIC DIMENSIONS	03.23.90	I.N
B	REVISED TITLE	5.13.90	IN
C	CORRECTED 1.34 (44) TO 1.34 (34)	09.10.92	IN

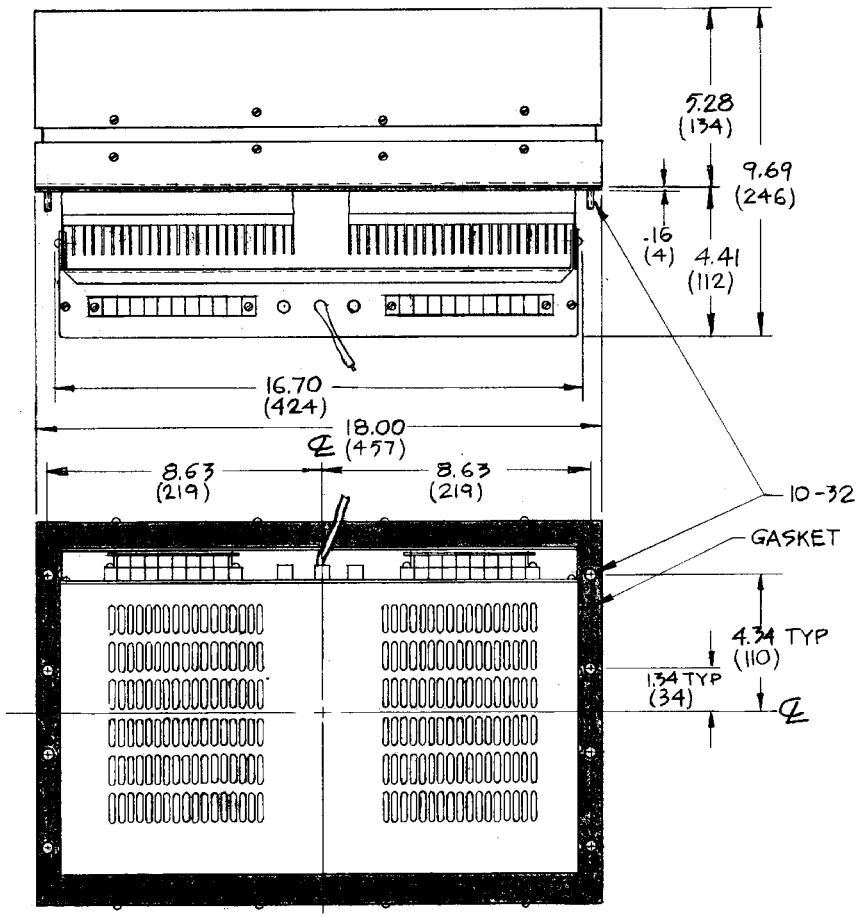

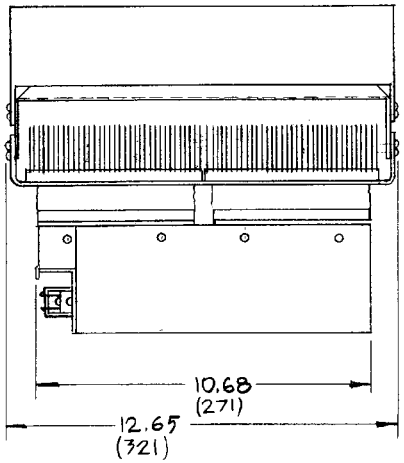

NOTE : DIMENSIONS ; INCHES
(MILLIMETERS)

UNLESS OTHERWISE SPECIFIED DIMENSIONS ARE IN INCHES TOLERANCES ARE: FRACTIONS DECIMALS ANGLES ± .XX ± ± .XXX ±	teca ThermoElectric Cooling America Corp.
MATERIAL	AHP 1801/1801X ASSEMBLY
FINISH	
APPROVALS / DATE	SIZE B / DRAWING NO. 1800-B-A18
DRAWN I.N. 1.23.90	
CHECKED	SCALE 1/4 / D1291 / SHEET / OF

D INDICATES BLUE RING TERMINAL
● INDICATES SOLDER CONNECTION
◗ INDICATES RED RING TERMINAL
▮ INDICATES SMALL RED RING TERMINAL
▯ INDICATES SMALL BLUE RING TERMINAL

⬭ INDICATES 18 AWG WIRE
▭ INDICATES 20 AWG WIRE
⬭ INDICATES PLENUM CABLE WIRE
⬭ INDICATES 16 AWG WIRE

◇ INDICATES AMP 321519 CLOSED END SPLICE
◆ INDICATES AMP 55843-1 CLOSED END SPLICE

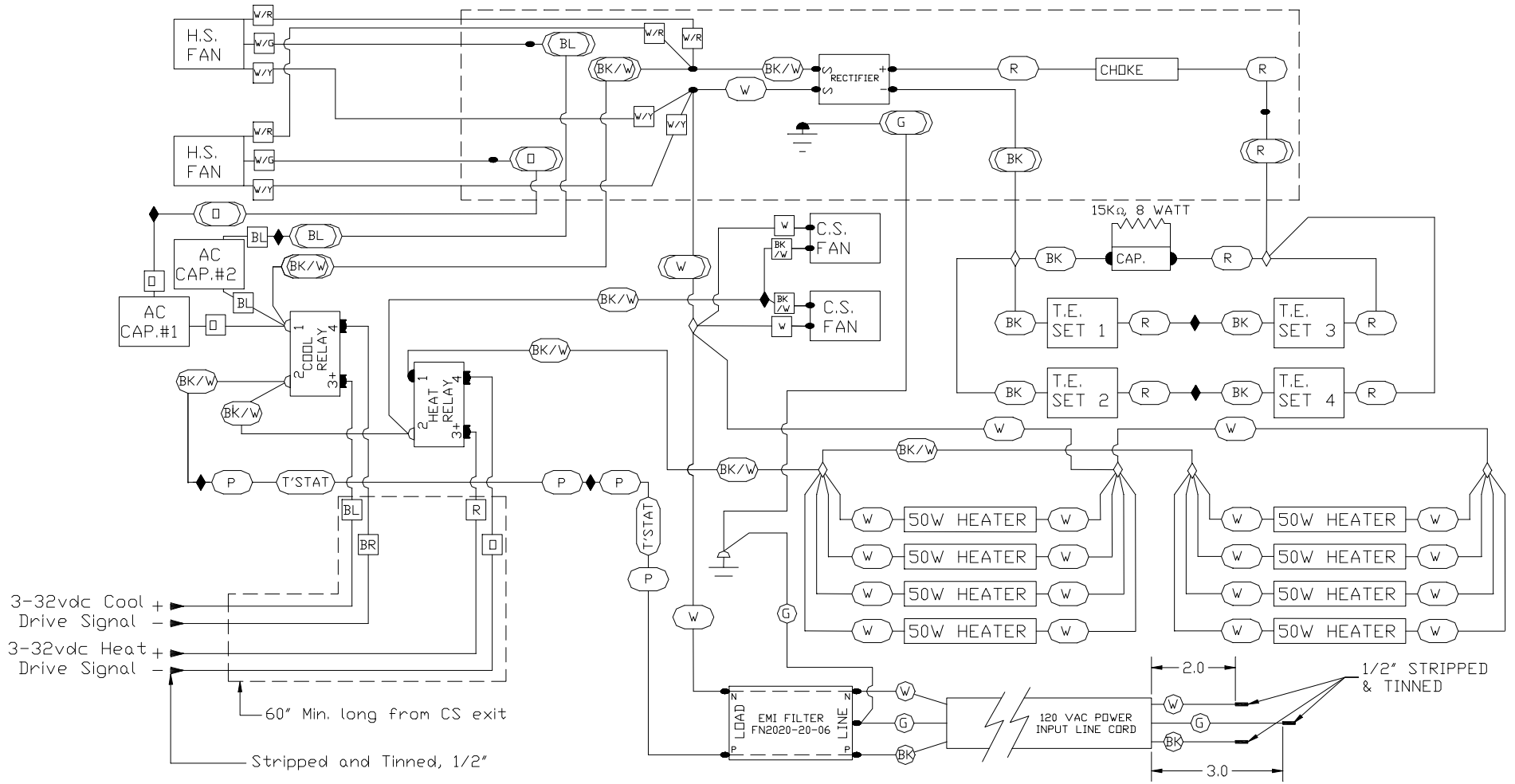

REV	DESCRIPTION	Date	APPROVED
A	Added EMI filter.	05/23/2011	AA

INFORMATION DISCLOSED HEREIN IS THE CONFIDENTIAL PROPERTY OF TECA CORP. RECIPIENT SHALL NOT USE THE INFORMATION IN ANY UNAUTHORIZED MANNER.

UNLESS OTHERWISE SPECIFIED DIMENSIONS ARE IN INCHES
TOLERANCES ARE:
DECIMALS .XX +/- .XXX+/-
ANGLE +/-
FRACTION +/-
FINISH:
MATERIAL:

THERMOELECTRIC COOLING AMERICA CORP.

AHP-1800XPHC-1
WIRING DIAGRAM

DRAWN BY: AA
DATE: 03/07/02
D5788

DRAWING # 1800-A-E110
REV LEVEL A
SCALE
MASTER: MASTER
SHEET

Mounting, Monture, Montage, Montaggio

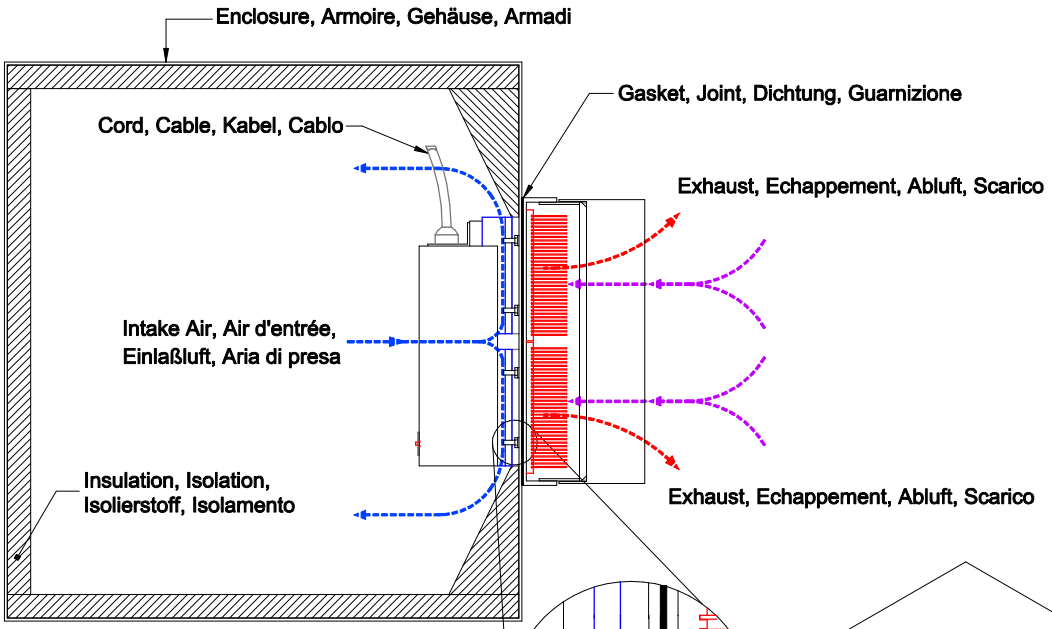

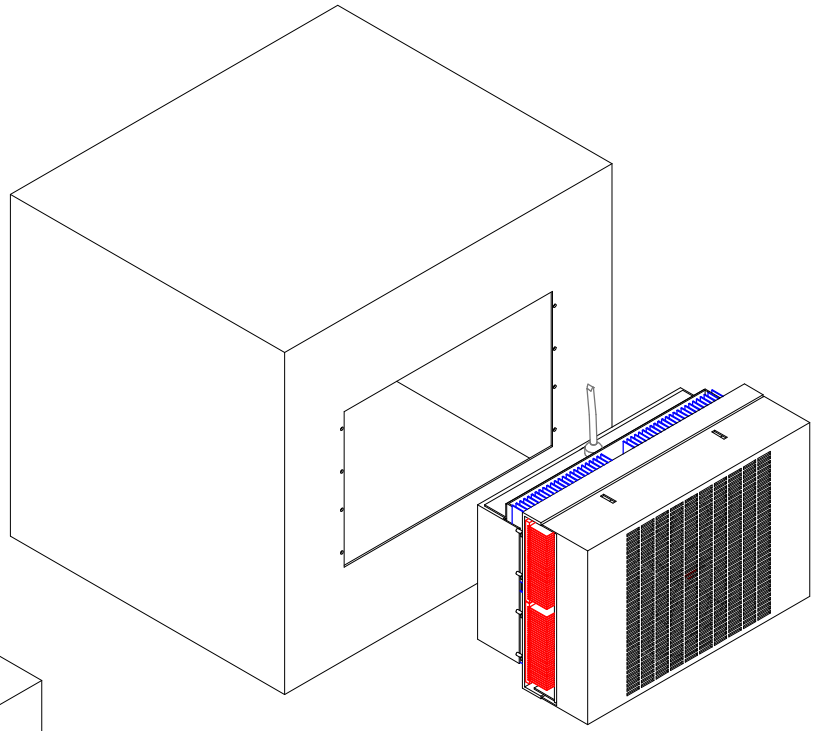

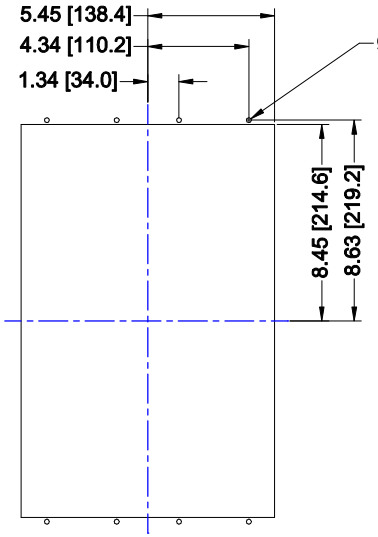

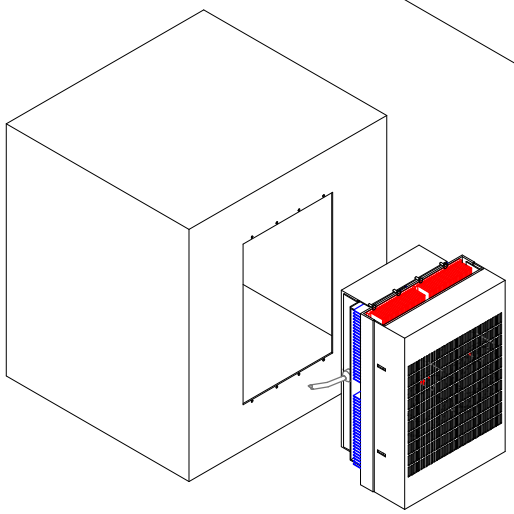

Alternate, Alternative, Alternative, Alternativa

- "Warning: Risk of electric shock. Can cause injury or death. Disconnect all remote electric power supplies before servicing.

  Avertissement: Risque de choc electriques. Peut causer des blessures et meme entrainer la mort. Couper les sources d'alimentation a distance avant le depannage."

- "Warning - Explosion Hazard - Substitution of components may impair suitability for Class I, Division 2.

  Avertissement - Risque D'Explosion - La substitution de components peut render ce material inacceptable pour les emplacements de Class 1, Division 2."

English, Français, Deutsch, Italiano
Dimensions: Inches [Millimeters]

REV	DESCRIPTION	Date	APPROVED
A	Changed AHP-1800P to AHP-1800EP in title block.	09/01/2011	AA
B	Revised warning notes to reflect the Intertek report.	05/25/2016	AA

INFORMATION DISCLOSED HEREIN IS THE CONFIDENTIAL PROPERTY OF TECA CORP. RECIPIENT SHALL NOT USE THE INFORMATION IN ANY UNAUTHORIZED MANNER.

UNLESS OTHERWISE SPECIFIED
DIMENSIONS ARE IN INCHES
TOLERANCES ARE:

DECIMALS	ANGLE
.XX +/-	+/-
.XXX+/-	FRACTION +/-

FINISH:

MATERIAL:

THERMOELECTRIC COOLING AMERICA CORP.

AHP-1800EP / AHP-1800XP SERIES
TYPICAL FIELD MOUNTING

DRAWN BY: AA	DRAWING # 1800-A-F52		REV LEVEL B
DATE: 05/23/2011			
D8090	SCALE	MASTER: MASTER	SHEET

teca
ThermoElectric Cooling America Corporation
4048 W. Schubert Avenue • Chicago, IL (U.S.A.) 60639
Ph: 773/342-4900 Fx: 773/342-0191
teca@thermoelectric.com www.thermoelectric.com

DECLARATION OF CONFORMITY

TYPE OF EQUIPMENT

Electrical Heat Pump, Air Conditioner
Solid State Cooling Devices

MODEL NUMBERS

Model nos. AHP followed by -1200XP, or -1200XPM, or 1200EP, or -1201XP, or -1201XPM or -1201EP; may be followed by HC may be followed by –1 or W/TC followed by -3F or -6F.
Model nos. AHP followed by 1800XP or 1800EP; may be followed by HC; may be followed by -1, or -2, or W/TC followed by 3F or 6F.
Model nos. AHP followed by -1801XP or -1801EP; may be followed by HC; may be followed by -1 or -2, or W/TC followed by 3F or 6F.
Model no. AHP followed by -1802XP or 1802EP may be followed by HC, may be followed by -1, or -2, or W/TC followed by 3F or 6F.

YEAR OF MANUFACTURE

Refer to the first two digits of the serial number on the manufacturers ID label

MANUFACTURER

TECA Corporation
4048 W. Schubert Avenue
Chicago, IL 60639
U.S.A.

APPLIED STANDARDS

- Standard for Electrical Equipment for Use in Class I and Class II, Division 2 and Class III Hazardous (Classified) Locations (UL 1604 - 3rd Edition 10/06/1995)
  [Note: For use in Class I, Division 2 Locations Only]
- Standard for Non-Incendive Electrical Equipment for Use in Class I, Division 2 Hazardous Locations; Industrial Products; General Instruction No. 1 (CSA C22.2 No. 213-M1987 Ed.1 R1992)
- Standard for Safety of Heating and Cooling Equipment (UL 1995 / CSA C22.2.2 No. 236-05 - 3rd Edition, dated: February 18, 2005)

TESTING AGENCY

ITS Intertek Testing Services ETL SEMKO

REPORT No.

551722

VP of Engineering
Andy Brecklin

May 26, 2011

LIMITED WARRANTY

In the event a defect in material or workmanship is discovered in any of TECA's products within one year after the date they are delivered to Buyer, and if: (a) TECA is notified of the defect in writing by certified mail within 14 days of the date of discovery; (b) TECA may then either, at its sole discretion, inspect the product at Buyer's location, or require that the product be made available at Buyer's expense at TECA's premises for TECA's inspection within 14 days of the date of notification; and (c) the products are defective and the defects result from faulty materials and/or workmanship and not in any way from accident, misuse, misapplication, mishandling, modification, or alteration by the Buyer or the shipper, then TECA shall, at its sole option, repair or exchange defective products free of charge to Buyer, or credit to buyer the price of the defective products. ALL OTHER WARRANTIES, EXPRESS OR IMPLIED, ARE EXCLUDED, INCLUDING BUT NOT LIMITED TO THE IMPLIED WARRANTIES OF MERCHANTABILITY AND FITNESS FOR A PARTICULAR PURPOSE. IN NO EVENT SHALL TECA BE LIABLE FOR ANY CLAIM BASED UPON BREACH OF EXPRESS OR IMPLIED WARRANTY OR ANY OTHER DAMAGES WHETHER SPECIAL, INDIRECT, INCIDENTAL, CONSEQUENTIAL, LOST PROFITS, BUSINESS INTERRUPTION, OR LOSS OF BUSINESS OR CUSTOMER RELATIONSHIPS.

RETURNED GOODS, RESTOCKING CHARGES

In order to return merchandise for any reason (repair, replacement, or credit) a return authorization number must be issued by TECA. New merchandise may not be returned for credit beyond 60 days from shipment. Charges for incidental or other damages may also be made. All returned goods must be sent freight prepaid. A restocking charge of 15% will apply. On special equipment and custom modified equipment orders, additional incremental cancellation charges may be made.